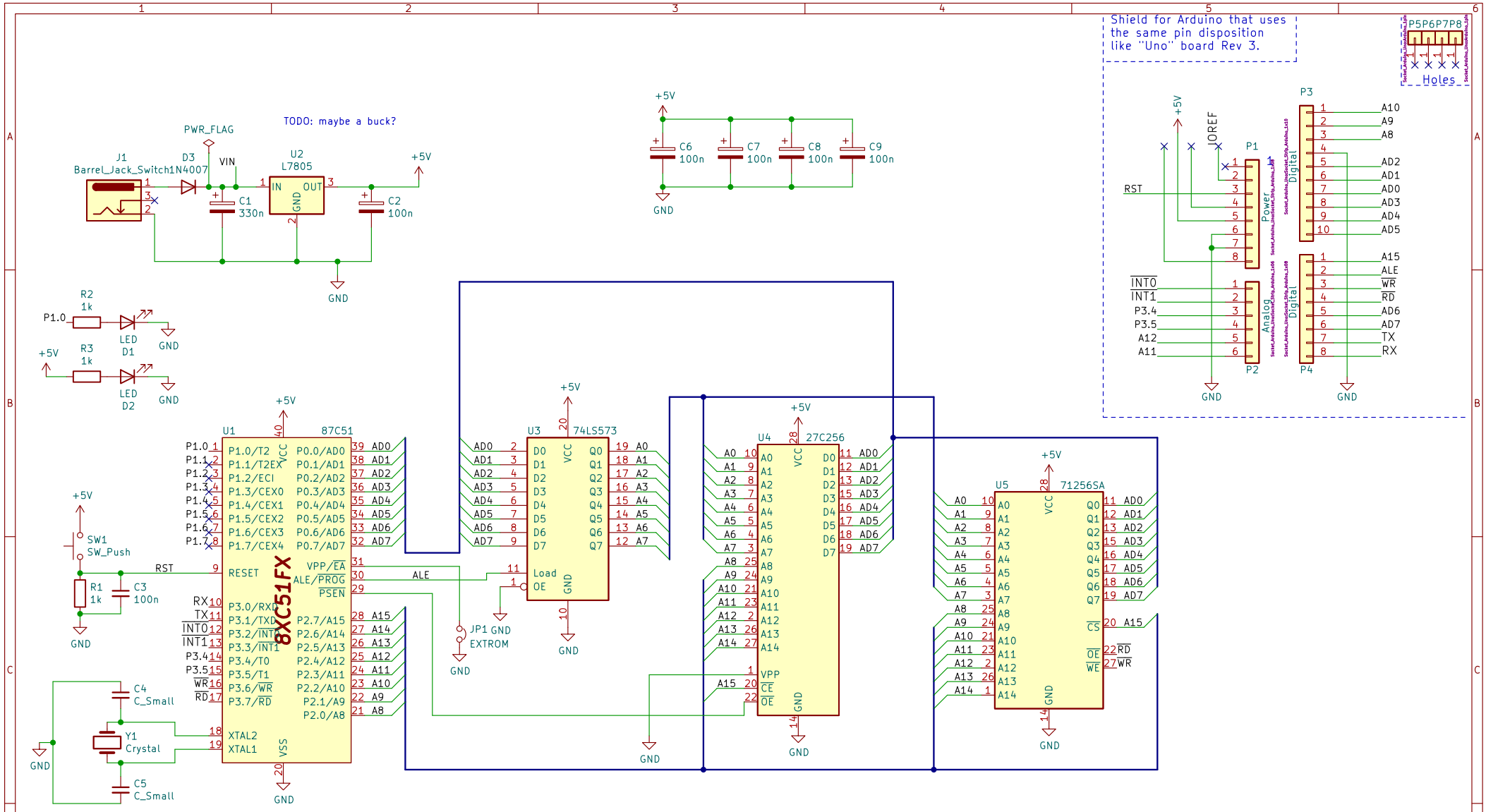

MCS51 based arduino compatible board

polprog.net

Sheet: /

File: 8051duino.kicad_sch

Title: 8051duino

Size: A4	Date: 2022-02-08	**Rev: 2**
KiCad E.D.A. eeschema (6.0.2)		Id: 1/1